VRC Dry Vacuum Pumps

Instruction Manual For Operation and Maintenance of

2 By 8 Duplex

2 By 8 Series

1 By 8 Simplex

1 By 16 Parallel

Oil Free Vacuum Pumps

Price: $20.00
Part #: 795039
Printed January 1996

Contents

Introduction 1
- Pumps Covered By This Manual 1
- Safety Considerations 2
- General Hazard Information 2

Specifications 5
- 2 By 8 Series 5
- 2 By 8 Duplex 6
- 1 By 8 Simplex 7
- 1 By 16 Parallel 8

Unpacking, Installation, and Operation 9
- Unpacking 9
- Installation 9
- Operation 9
- Performance And Applications 12
  - Diffusion Pumps 13
  - Turbopumps 13
  - Molecular Drag Pumps and Roots Blowers 13
  - Sputter-Ion Pumps 14
  - Helium Leak Detectors 14
  - Condensable Vapors 14
  - Pumping Hazardous Gases 16
  - Exhaust Port Trap 17
  - Gas Transfer Applications 18
  - Partial Pressure Effects 18

Maintenance and Troubleshooting 19
- Returned Shipment Procedure 19
- Maintenance 19
- Troubleshooting 19
- Probable Causes And Remedies 19
- Service Procedures 21

Spare Parts List 22

General Arrangement Drawing 23

1. Introduction

The VRC Multistage Dry Vacuum Pumps are quiet, oil free roughing pumps available in four configurations to fit your system. These pumps provide high speed roughing with full capacity at atmosphere for all gases: He, H_2, Ar, N_2. They are ideal for Turbo and Cryo pump roughing and foreline. None of the Multistage Dry Pumps need oil, and none have diaphragms.

All VRC Dry Pumps use the same patented piston technology. What's new is the quiet running direct drive system that will give 10,000 low noise hours without any need for maintenance.

The pumps are especially useful for initial evacuation of chambers which are then pumped by cryopumps, turbomolecular pumps, or ion pumps. They can also be used as clean backing pumps for turbopumps and have an expected life (before reconditioning) of over 10,000 hours of continuous operation.

These pumps do not require any lubrication and therefore produce a hydrocarbon-free vacuum, eliminating the possibility of vacuum chamber contamination. A residual gas analysis performed shows no traces of hydrocarbons.

PUMPS COVERED BY THIS MANUAL

This manual contains installation, operation, maintenance, and troubleshooting information for the 1 By 8, 2 By 8 Duplex, 2 By 8 Series, and 1 By 16 Parallel oil-free, mechanical vacuum pumps. Please read it before operating the pump.

Vacuum Research Corporation's oil-free dry vacuum pumps are designed to ensure safety when used properly. It is the responsibility of the user to follow safety-related warnings, cautions, notes and other requirements described in this manual.

VRC reserves the right to cancel the warranty if the pump is disassembled without authorization, if oil or other liquids are added to the pump, if corrosive gases are pumped which are not compatible with the materials used in the manufacture of the pump, and if unauthorized spare parts are used.

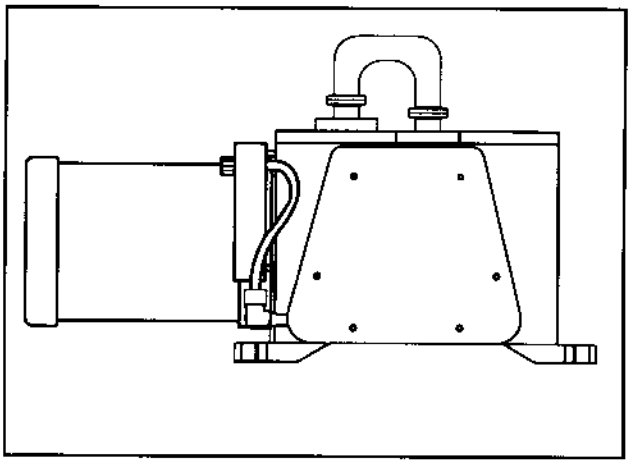

2 By 8 Series Dry Pump

The 2 By 8 Series Model comes with the pistons in series to provide an ultimate pressure of 20 mTorr and a speed of 8 CFM (225 l/min). The 2 By 8 Series pumps have single KF-25 inlet and exhaust ports.

Safety Considerations

Operators and service personnel must be aware of all hazards associated with this equipment. They must know how to recognize hazardous and potentially hazardous conditions, and know how to avoid them. The consequences of unskilled, improper, or careless operation of the equipment can be serious. This product must only be operated and maintained by trained personnel. Every operator or service person must read and thoroughly understand operation/maintenance manuals and any additional information provided by Vacuum Research Corporation. All warnings and cautions should be read carefully and strictly observed. Consult local, state, and national agencies regarding specific requirements and regulations. Address any safety, operation, and/or maintenance questions to the manufacturer.

The following format is used in this manual to call attention to hazards:

⚠ WARNING
Warnings are used when failure to observe instructions or precautions could result in serious injury or death.

⚠ CAUTION
Cautions are used when failure to observe instructions could result in damage to equipment, whether VRC-supplied or other associated equipment.

⚠ Note
Notes are intended to aid the operator in obtaining the best performance from the equipment.

GENERAL HAZARD INFORMATION

⚠ WARNING
Do not operate this pump before reading the instructions. These pumps utilize new technology and should not be considered as ordinary, oil-sealed mechanical pumps.

⚠ WARNING
Do not operate pump with the cover removed. Serious injury can result if hands, feet, or clothing are caught in the moving parts.

⚠ WARNING

If the gases to be pumped contain toxic, corrosive, or asphyxiant components, the pump must be placed in a ventilated area with an adequate exhaust system or suction hoods. If a sealed exhaust port is installed by the user, do NOT pressurize the exhaust line.

⚠ WARNING

Do NOT install a valve in the exhaust port of any vacuum pump. This will prevent possible overpressure if the valve can be inadvertently closed during operation. Vacuum pumps have high pressure ratios and may produce very high discharge pressures if the discharge lines are blocked.

⚠ CAUTION

Protect the pump from possible ingestion of small objects (screws, nuts, washers, pieces of wire, drops of liquid, etc.) If necessary, install a trap or filter before the inlet port.

⚠ CAUTION

Do not use the pump for applications which produce a substantial amount of abrasive or high viscosity deposits. Avoid vapors which can condense into a liquid when compressed inside the pump. Normal amounts of humidity in atmospheric air (at room temperature) will not affect performance. If necessary, use inlet filters or condensers.)

⚠ CAUTION

Do not allow the ingestion of liquids or accumulation of solid - or liquid - reaction products in the pump.

⚠ Note

Do not use the pump for backing diffusion pumps unless a well-designed and well maintained trap is used in the foreline. The possible carry-over of the diffusion pump fluid can interfere with the dry friction conditions.

⚠ Note

Check that the roughing lines and other vacuum connections are clean before installing the oil-free vacuum pump. This is especially important in areas which have been previously evacuated by oil-sealed mechanical pumps. If exhaust lines are connected to the exhaust of other pumps, do not introduce liquids into the exhaust port of the oil-free pump; install a liquid trap or accumulator.

⚠ Note

The pump can be turned off whenever its operation is not required. Since the pistons act as valves when the pump is stopped, the vacuum chamber is not directly exposed to the external pressure. The inlet pressure in the pump will rise slowly.

2. Specifications

2 By 8 Series

Pumping Speed at 60 Hz	8 CFM (225 l/min., 14 m^3/hr.)
Ultimate Pressure	Less than 20 mT (3 Pa).
Inlet Port	1 KF-25 port.
Outlet Port	1 KF-25 port.
Inlet Pressure Range	Any pressure up to 800 Torr (106 kPa/1060 mbar).
Warm Up Time	No warm up required. (No oil to heat up and degas.)
Maximum Outlet Pressure	1000 Torr (133 kPa).
Standard Motor	1 ½ HP, 3 phase, TEFC, 208-230/460 V, 60 Hz, 1140 RPM. Other voltages and single phase power can be accommodated by ordering the optional "Soft Start" inverter. Explosion proof motors are also available.
Optional Motor	1 ½ HP, 1 phase, TEFC, 115/220 V, 60 Hz, 1140 RPM.
Drive System	Direct coupled motor, 1140 RPM.
Ambient Temperature & Cooling	10° C to 40° C (50° F to 104° F), air cooled.
Materials Of Construction	Aluminum, PTFE piston liners, Viton O-rings.
Tolerance To Dust	Small amounts of dust are acceptable, but inlet filters are needed for extremely dirty applications.
Noise Level	Extremely quiet, under 56 db(A) @ 1 Meter at low pressures.
Maintenance	None required for 5 years or 10,000 hours. Motor may require occasional lubrication.
Mounting And Orientation	4 tapped holes, 3/8-16; and 4 through holes 14 mm (9/16") diameter. Orient in any plane; on side, end or bottom. Bolt to wall or sit on floor.
Dimensions	24.25 inches long (includes motor) X 19 inches wide X 13 inches high (62 X 48 X 33 cm).
Weight	Net: 132 pounds (60 kg), Shipping: 158 pounds (71 kg).

2 By 8 Duplex

Pumping Speed at 60 Hz	2 separate pumps, each one 8 CFM (225 l/min., 14 m^3/hr.)
Ultimate Pressure	Less than 700 mTorr (93 Pa)
Inlet Port	1 KF-25 port.
Outlet Port	1 KF-25 port.
Inlet Pressure Range	Any pressure up to 800 Torr (106 kPa/1060 mbar).
Warm Up Time	No warm up required. (No oil to heat up and degas.)
Maximum Outlet Pressure	1000 Torr (133 kPa).
Standard Motor	1 ½ HP, 3 phase, TEFC, 208-230/460, 60 Hz, 1140 RPM. Other voltages and single phase power can be accommodated by ordering the optional "Soft Start" inverter. Explosion proof motors are also available.
Optional Motor	1 ½ HP, 1 phase, TEFC, 115/220 V, 60 Hz, 1140 RPM.
Drive System	Direct coupled motor, 1140 RPM.
Ambient Temperature & Cooling	10° C to 40° C (50° F to 104° F), air cooled.
Materials Of Construction	Aluminum, PTFE piston liners, Viton O-rings.
Tolerance To Dust	Small amounts of dust are acceptable, but inlet filters are needed for extremely dirty applications.
Noise Level	Extremely quiet, under 56 db(A) @ 1 Meter at low pressures.
Maintenance	None required for 5 years or 10,000 hours. Motor may require occasional lubrication.
Mounting And Orientation	4 tapped holes, 3/8-16; and 4 through holes 14 mm (9/16") diameter. Orient in any plane; on side, end or bottom. Bolt to wall or sit on floor.
Dimensions	24.25 inches long (includes motor) X 19 inches wide X 13 inches high (62 X 48 X 33 cm).
Weight	Net: 132 pounds (60 kg), Shipping: 158 pounds (71 kg).

1 By 8 Simplex

Pumping Speed at 60 Hz	8 CFM (225 l/min., 14 m^3/hr.)
Ultimate Pressure	Less than 700 mTorr (93 Pa)
Inlet Port	1 KF-25 port.
Outlet Port	2 separate KF-25 ports.
Inlet Pressure Range	Any pressure up to 800 Torr (106 kPa/1060 mbar).
Warm Up Time	No warm up required. (No oil to heat up and degas.)
Maximum Outlet Pressure	1000 Torr (133 kPa).
Standard Motor	1 ½ HP, 3 phase, TEFC, 208-230/460, 60 Hz, 1140 RPM. Other voltages and single phase power can be accommodated by ordering the optional "Soft Start" inverter. Explosion proof motors are also available.
Optional Motor	1 ½ HP, 1 phase, TEFC, 115/220 V, 60 Hz, 1140 RPM.
Drive System	Direct coupled motor, 1140 RPM.
Ambient Temperature & Cooling	10° C to 40° C (50° F to 104° F), air cooled.
Materials Of Construction	Aluminum, PTFE piston liners, Viton O-rings.
Tolerance To Dust	Small amounts of dust are acceptable, but inlet filters are needed for extremely dirty applications.
Noise Level	Extremely quiet, under 56 db(A) @ 1 Meter at low pressures.
Maintenance	None required for 5 years or 10,000 hours. Motor may require occasional lubrication.
Mounting And Orientation	4 tapped holes, 3/8-16; and 4 through holes 14 mm (9/16") diameter. Orient in any plane; on side, end or bottom. Bolt to wall or sit on floor.
Dimensions	24.25 inches long (includes motor) X 17.5 inches wide X 13 inches high (62 X 45 X 33 cm).
Weight	Net: 132 pounds (60 kg), Shipping: 158 pounds (71 kg).

1 By 16 Parallel

Pumping Speed at 60 Hz	16 CFM (450 l/min., 28 m^3/hr.)
Ultimate Pressure	Less than 700 mT (93 Pa).
Inlet Port	1 KF-25 port.
Outlet Port	2 separate KF-25 ports.
Inlet Pressure Range	Any pressure up to 800 Torr (106 kPa/1060 mbar).
Warm Up Time	No warm up required. (No oil to heat up and degas.)
Maximum Outlet Pressure	1000 Torr (133 kPa).
Standard Motor	1 ½ HP, 3 phase, TEFC, 208-230/460, 60 Hz, 1140 RPM. Other voltages and single phase power can be accommodated by ordering the optional "Soft Start" inverter. Explosion proof motors are also available.
Optional Motor	1 ½ HP, 1 phase, TEFC, 115/220 V, 60 Hz, 1140 RPM.
Drive System	Direct coupled motor, 1140 RPM.
Ambient Temperature & Cooling	10° C to 40° C (50° F to 104° F), air cooled.
Materials Of Construction	Aluminum, PTFE piston liners, Viton O-rings.
Tolerance To Dust	Small amounts of dust are acceptable, but inlet filters are needed for extremely dirty applications.
Noise Level	Extremely quiet, under 56 db(A) @ 1 Meter at low pressures.
Maintenance	None required for 5 years or 10,000 hours. Motor may require occasional lubrication.
Mounting And Orientation	4 tapped holes, 3/8-16; and 4 through holes 14 mm (9/16") diameter. Orient in any plane; on side, end or bottom. Bolt to wall or sit on floor.
Dimensions	24.25 inches long (includes motor) X 19 inches wide X 13 inches high (62 X 48 X 33 cm).
Weight	Net: 132 pounds (60 kg), Shipping: 158 pounds (71 kg).

3. Unpacking, Installation, and Operation

UNPACKING

Inspect the pump, save the shipping container and report any damage to the carrier. Each model of the dry pump is inspected and carefully packed prior to shipment. Inspect your pump carefully while unpacking. In case of external damage, keep the shipping container and notify the shipper immediately. The packing materials are designed specifically for your pump. Please keep them, and use them to repack the pump when transporting it.

To remove the pump from the container, remove the four 3/8-16 nuts holding the pump to the skid. The pump weighs approximately 120 pounds. It requires two or more persons to lift it, or use a suitable lifting device. It is best to support the pump from the bottom.

INSTALLATION

Place the pump in any convenient space. Suitable flexible supports such as rubber feet can be used, if desired, to reduce vibration transmission to the floor or other support structures. In principle, the pump may be oriented in any plane: on side, end, or bottom; but the preferred mounting is horizontal with mounting holes at bottom. Four (4) tapped holes, 3/8-16; and four (4) through holes 14 mm (9/16" dia.) are provided.

⚠ Note

Check that the roughing lines and other vacuum connections are clean before installing the oil-free vacuum pump. This is especially important in areas which have been previously evacuated by oil-sealed mechanical pumps. If exhaust lines are connected to the exhaust of other pumps, do not introduce liquids into the exhaust port of the oil-free pump; install a liquid trap or accumulator.

OPERATION

The pump can be operated by simply connecting it to a suitable power source.

The standard three phase motor is factory-wired for 208-230 volt, 60 Hz service. Other voltages, single phase, 50 Hz, and explosion proof motors may be ordered. To operate the pump at other voltage levels, refer to the wiring diagrams on the motor service plate, or contact the factory.

When connecting the motor to a suitable power source, preserve the direction of rotation of the motor (clockwise as viewed from the shaft end of the motor) although, in concept, the operation of the pump is not affected by its direction of rotation.

It is very helpful to install a vacuum gauge (for example, a thermocouple or Pirani vacuum gauge) near the inlet of the pump and a vacuum-quality valve upstream of the gauge. In this way, the performance of the pump can be quickly checked when it is isolated from the system.

Start the pump with the inlet port closed or attached to a vacuum chamber (the pump can be operated for several minutes with the inlet open to atmosphere). Install an inlet trap or filter and exhaust trap if required.

⚠ WARNING

Do not operate the pump with the cover removed. Serious injury can result if hands, feet, or clothing are caught in the moving parts.

Under normal operation at room temperature, and after 10 or 20 minutes when the inlet pressure is less than 1 Torr, the external temperature at any part of the pump should not be above 50 °C (125 ° F). Normally, the final exhaust chamber will be warmer than the other stages, but you should be able to touch any part of the pump (except the motor) without burning your fingers.

The pump does not contain nor does it require any fluids for lubrication. Before attempting any maintenance, contact the VRC factory or representatives. Report to VRC any significant deterioration of ultimate pressure, a rise in temperature, or the occurrence of unusual noise.

The pump must have adequate ventilation during operation. Arrangements for adequate ventilation must be made if the pump is placed in a small service room, inside of system cabinets, or placed into an enclosure for noise reduction. The pump and motor produce approximately 500 watts of heat energy. However, for short periods of time during evacuation of large volumes, the heat load may be triple that value. Therefore, the pump should not be installed in closed cabinets that restrict the free flow of air around the outside of the pump and which may cause the ambient temperature to exceed 40° C (104°F).

⚠ WARNING

If the gases to be pumped contain toxic, corrosive, or asphyxiant compounds, the pump must be placed in a ventilated area with an adequate exhaust system or suction hoods. If a sealed exhaust port is installed by the user, do NOT pressurize the gas line.

⚠ WARNING

Do NOT install a valve in the exhaust port of ANY vacuum pump. This will prevent possible overpressure if the valve can be inadvertently closed during operation. Vacuum pumps have high pressure ratios and may produce very high discharge pressures if the discharge lines are blocked.

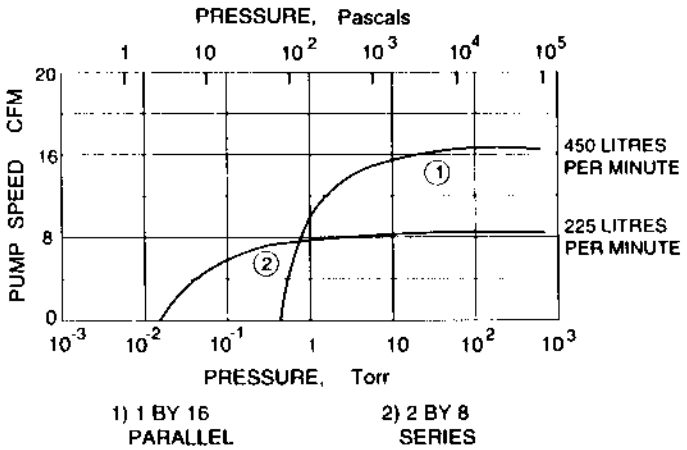

Pumping Speed for Air

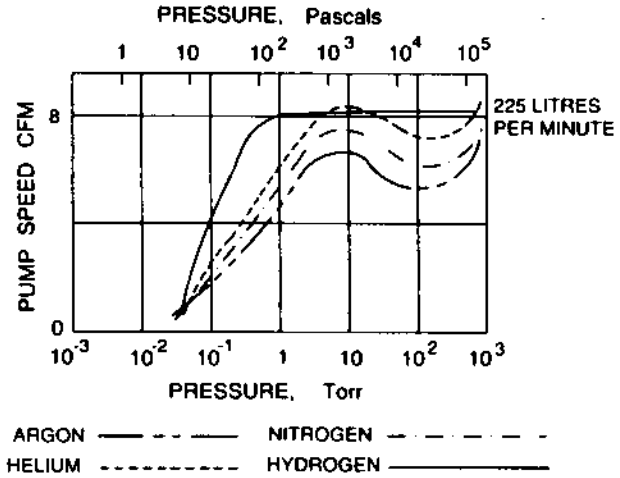

High Pumping Speed for All Gases

Pumping Speeds At Various Inlet Pressures

PERFORMANCE AND APPLICATIONS

⚠ CAUTION

Protect the pump from possible ingestion of small objects (screws, nuts, washers, pieces of wire, drops of liquid, etc.) If necessary, install a trap or filter before the inlet port.

Do not use the pump for applications which produce a substantial amount of abrasive or adhesive powder, or condensable vapors which can produce adhesive or high viscosity deposits. Avoid vapors which can condense into a liquid when compressed inside the pump. Normal amounts of humidity in atmospheric air (at room temperature) will not affect performance.

⚠ Note

The pump can be turned off whenever its operation is not required. Since the pistons act as valves when the pump is stopped, the vacuum chamber is not directly exposed to the external pressure. The inlet pressure in the pump will rise slowly.

The ideal application for the VRC Dry Pumps is the initial evacuation (rough pumping) of clean vacuum chambers. For example, evacuation of systems which subsequently are pumped by cryopumps. However, the pump can be operated continuously if the application requires it. Generally, its performance, in regard to pumping speed and base pressure is similar to single stage, oil sealed, rotary mechanical pumps, see Pumping Speed Curves at left. The Multistage pumps may be used for backing high-vacuum pumps as described in the following paragraphs.

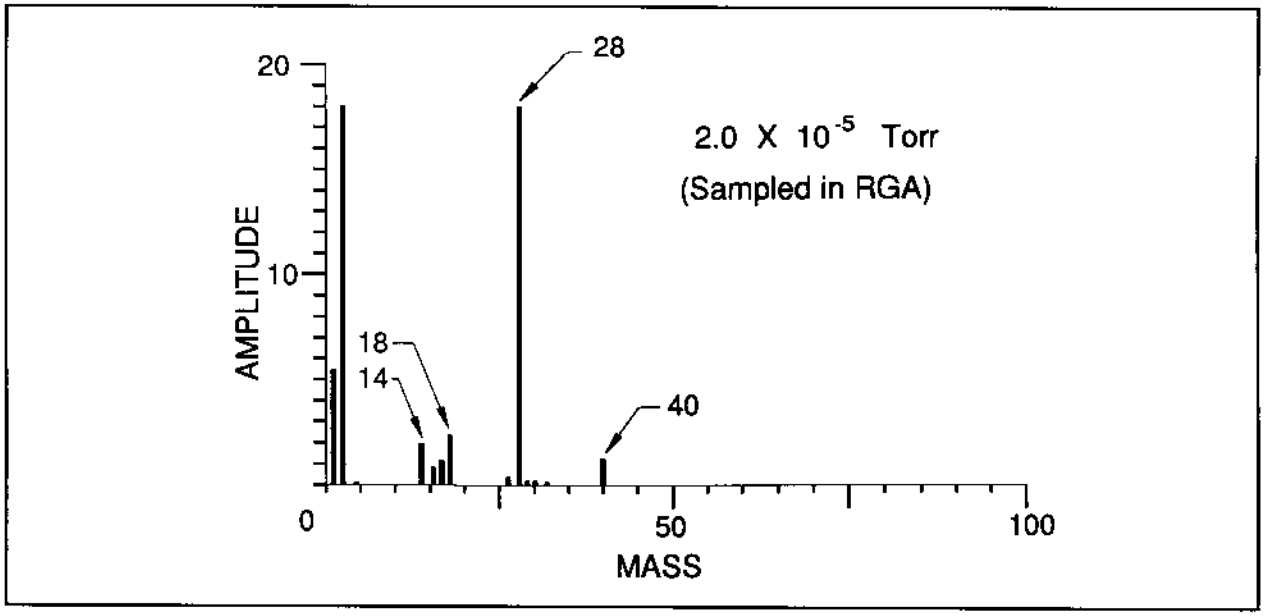

Hydrocarbon Free Mass Spectra

Diffusion Pumps

⚠ Note
The use of the Multistage Pump for backing diffusion pumps is not recommended unless a well designed and well maintained trap is used in the foreline. The possible carry-over of the pumping fluid can interfere with the dry friction conditions.

Turbopumps

When backing turbopumps, check the discharge pressure requirements (some turbo pumps may not operate at foreline pressures above 20 or 30 mTorr. Satisfactory performance is obtained with turbo pumps which have an adequate compression ratio and permit operation at discharge pressures above 20 mTorr. Turbo pumps which have magnetic or grease lubricated bearings may be preferred to assure complete cleanliness.

Molecular Drag Pumps and Roots Blowers

The Multistage pumps can be used for backing of relatively clean mechanical booster pumps such as Roots blowers. To prevent lubricating oil from the blower from entering the pump, traps or filters should be used between the two pumps. The Multistage pumps can be successfully paired with molecular drag pumps as well as Roots-type blowers. Again, grease-lubricated molecular pumps and "dry" type blowers are preferred. The expected performance will be very similar to that obtained with ordinary, oil-sealed mechanical pumps. In the case of molecular drag pumps, the crossover pressure should be typically 1 Torr or below (above that pressure,

the drag pump represents an impedance and the net pumping speed is not increased). In the case of Roots blowers, the size of the blower and the pressure at which it is started should be accommodated to power and pressure requirements for the Multistage pump being used. In other words, for a short period of time (up to several minutes), the pressure between the Roots blower and the dry pump can be higher than 30 Torr; however, for continuous operation, it should be below 30 Torr. Do not exceed atmospheric pressure at the inlet of the Multistage pump.

Sputter-Ion Pumps

Ion pumps may start easier after evacuation with the Multistage pumps at pressures as high as 20 mTorr compared to evacuation with sorption pumps. This is because of the absence of inert gases and hydrocarbons after evacuation with the Multistage pump. The degree of vacuum produced by the Multistage Pump may not always be sufficient. This depends on the type and size of the ion pump in relation to the volume of the system and subsequent outgassing rate. An additional single step of sorption pumping at liquid nitrogen temperatures or titanium evaporation will be sufficient to bridge the gap between the oil-free pump and ion pumps in cases of larger system volumes.

Generally, the appropriate time to switch from rough pumping to a high vacuum pump does not depend on pressure as such, but on the gas load of the system just before the transfer occurs.

For example, the throughput at the 2 By 9 Series pump at inlet pressures of 30 mTorr is approximately 0.1 Torr-liters/sec (3 liters/sec x 30 mTorr). Thus, if at the end of a roughing period with the Series pump the system pressure is 30 mTorr, the system gas load is 0.1 Torr-liters/sec. Then any high vacuum pump which is capable of maintaining a throughput of 0.21 Torr-liters/sec can be switched on at that time. This throughput is obtained with a pump with a speed of 400 liters/sec at an inlet pressure of 0.25 mTorr (or a pump with a speed of 100 liters/sec at 1 mTorr, for example). The subsequent evacuation will depend on the outgassing rate of the system rather than the residual pressure at the end of the rough pumping period.

Helium Leak Detectors

In mass spectrometer leak detection systems in which a clean roughing pump is required, the Multistage pumps can be used for initial evacuation. For conventional leak detectors which use a turbomolecular pump with an adequate pressure ratio for helium, a Multistage Pump can be used as a backing pump. However, in contraflow-type leak detectors, a constant atmospheric helium leak will limit the achievement of highest possible sensitivity. The helium partial pressure at the end of evacuation with a Multistage Pump will be approximately 10^{-7} Torr. Thus, if the turbo pump is set to have a pressure ratio of 100 for helium, the background in the mass spectrometer will be 1×10^{-9} Torr (of helium). For additional information refer to J. Vac. Science and Technology, A, Vol. 9, No. 3, May/June 1991 "Use of Oil-Free Mechanical Pumps With Leak Detectors" by M.H. Hablanian.

Condensable Vapors

The pump is not intended for pumping condensable vapors. However, a limited amount can be pumped in normal operation and a somewhat greater amount can be pumped in a mixture with a "permanent" gas (gas ballast or purge).

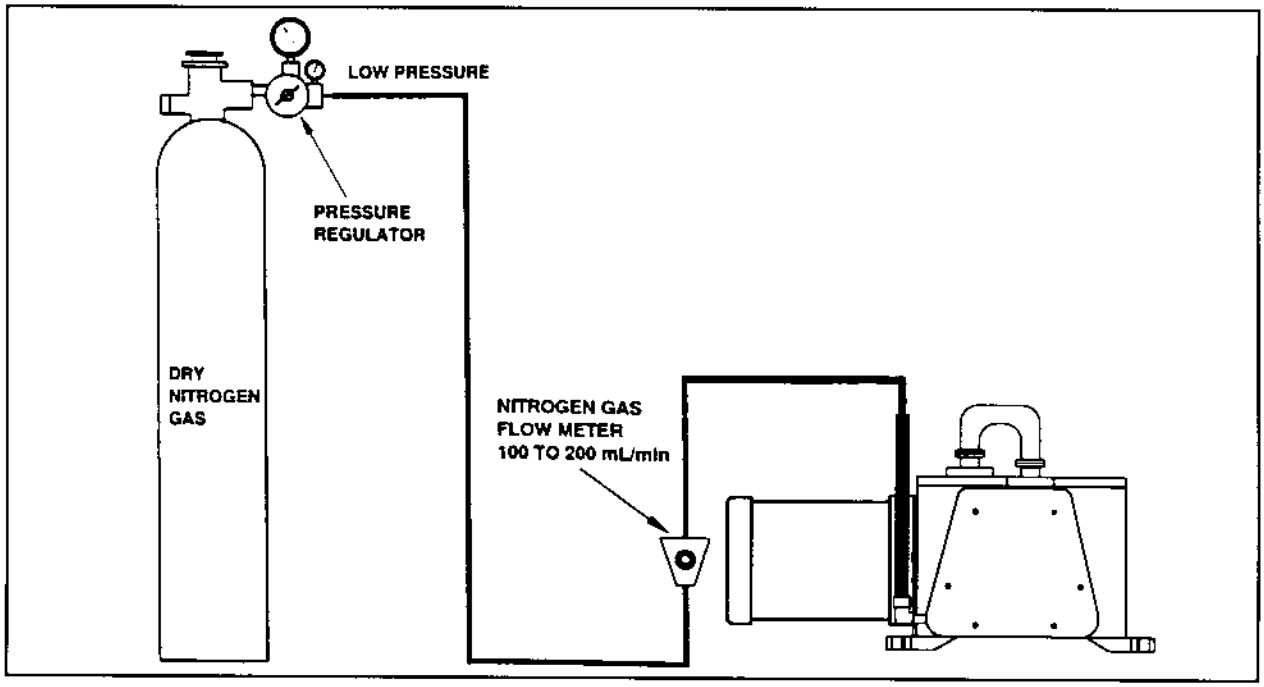

Gas Ballast Purge

The gas ballast can be introduced at the pump inlet; however, if a low inlet pressure is required, the purge gas can be introduced at the outlet as shown in the diagram of gas ballast purge. All 2 By 9 Series pumps are shipped with a needle valve to control the flow of the ballast gas.

Normal amounts of humidity in air and water vapor outgassing from sand blasted mild steel chambers at room temperature present no problem. When water vapor pressure exceeds approximately 200 mTorr, gas (air) ballasting is required. Otherwise, an accumulation of liquid inside the cylinder can damage the pump.

⚠ CAUTION

Do not allow ingestion of liquids or accumulation of solid - or liquid - reaction products in the pump.

The following general guidelines should be observed:

1. Do not permit water vapor pressure above 20 Torr at the inlet to the pump (the saturated vapor pressure of water at room temperature is near 20 Torr).
2. Use a mixture of air and water with equal mass flow (or less water). The figure below shows the required amounts of air ballast for given amounts of pumped water. The units for the flow rate of water are given as liquid equivalents because the water is pumped as "wet vapor" (i.e. partly condensed vapor).
3. The pump is not generally intended for evacuating wet parts or devices filled with liquids. However, the pump can be used for such applications if certain precautions are observed. The pumping manifolds must be designed in such a way as to prevent the possibility of a slug of liquid from entering the pump. Adequate drainage of liquid must be provided prior to the pump inlet, perhaps with some transparent sections for detecting the accumulated liquid.

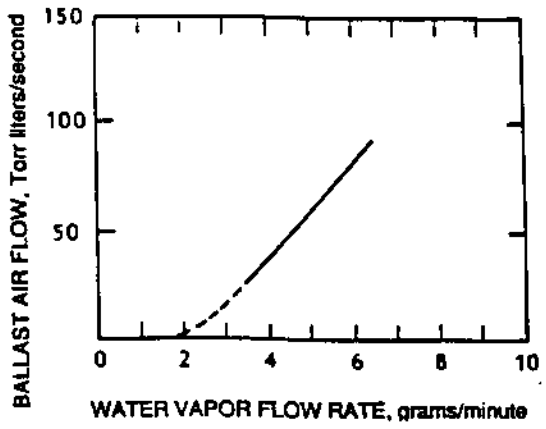

Gas Ballast at Inlet Required at Various Water Vapor Pumping Rates To Prevent Internal Condensation

The pump should be periodically exposed to a large gas load to degas any condensable vapor. That is, 100 percent air should be pumped through at elevated pressures (for example, 50 Torr inlet pressure for 15 minutes or even atmospheric air for a few minutes) until the low pressure of the pump is restored (50 mTorr or less).

For evacuating devices partly filled with liquids, it is obviously preferred that the liquid should have a low vapor pressure. Otherwise, in a dynamic (transient) situation, an isolation valve should be placed very near the pumped device so that it can be closed as soon as the air has been pumped out. This will prevent excessive amounts of vapor reaching the pump. If questions remain regarding these precautions, call Vacuum Research Corporation.

Pumping Hazardous Gases

In general, whenever hazardous gases are used in a vacuum system and the VRC pump, the user's installation and operation procedures should be discussed with safety experts. The materials of construction must be reviewed in regard to the possibility of direct chemical reactions.

The discharge port connections and lines must be designed by the user in such a way as not to leak gases out. Hazardous mixtures must be disposed of in a proper manner.

Certain gases may produce acids when combined with water. Also, solid reaction products in the form of fine powder may form a mass inside the last pumping stage of the pump. When the discharge valve is opened (during each stroke of the piston), a small amount of atmospheric air re-enters the pump while the valve is closing. The average pressure in the discharge space is below atmosphere, however it is possible that some gas will overcome the force of the valve spring.

In these cases, it is desirable to provide dry air or nitrogen bleed at the outlet port to prevent the presence of moisture in the area of the outlet port. It may be necessary to clean the cylinder(s) after 3 to 6 months of operation. Deterioration of ultimate pressure and an increase in the noise level may signal the need for cleaning.

When there is reason to be concerned about a possibility of minute leakage through the lip seals at the atmospheric end of the piston into the crankcase, an arrangement for crankcase purging and venting should be provided by the user.

Exhaust Port Trap

For pumping more or less pure air, a modified pump top cover without an exhaust port can be provided. In this case an internal exhaust port is left open and the pump discharge is vented into its own crankcase and mixed with the cooling air. When the process gases cannot be vented into the surrounding air, an exhaust port is installed at the outlet.

When it is preferable to not mix the pumped process exhaust with the cooling air the standard pump top cover with KF-40 or KF-25 exhaust ports should be used.

Exhaust lines from adjacent oil-sealed mechanical pumps or oil-lubricated blowers sometimes contain liquids (condensate); to prevent such liquids from dripping directly in the exhaust of the oil-free pump, an exhaust trap should be used.

For pumping air, the exhaust port of the pump can be left open but to muffle the noise at the higher inlet pressures, a flexible, corrugated exhaust line should be installed. The figure below shows an example of a simple trap which should be used whenever the exhaust lines contain liquid (condensate) from adjacent oil-sealed pumps or process chambers.

To prevent the entry of small particles into the pump, a similar trap or a filter should be used at the inlet.

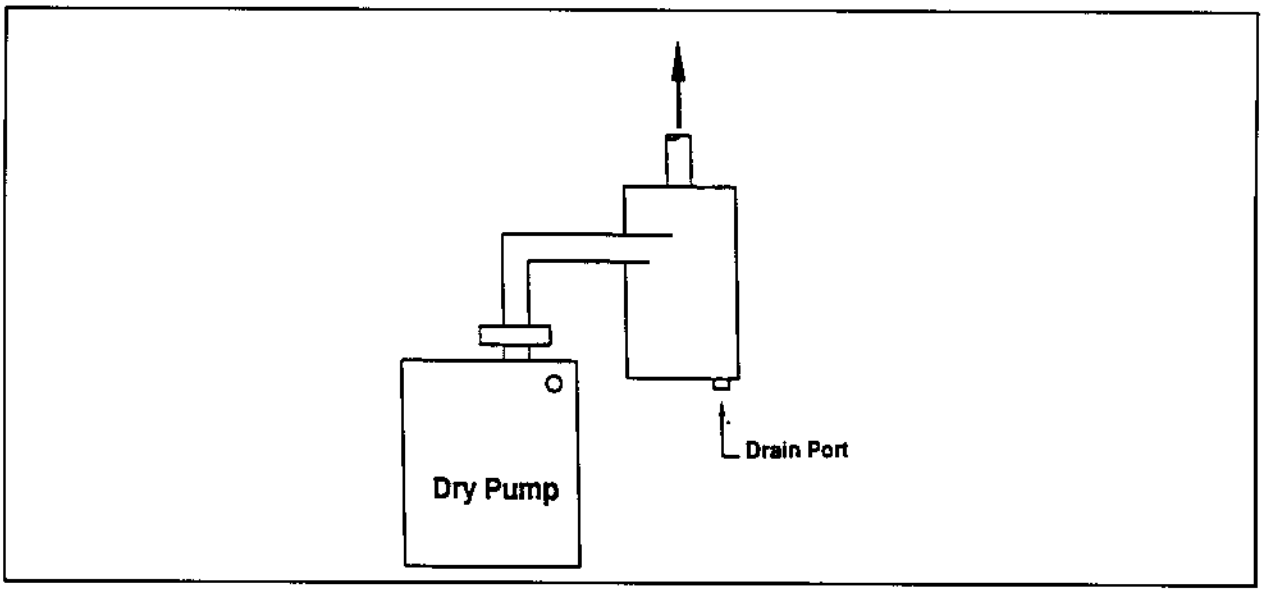

Recommended Installation of Trap at the Discharge Port to Prevent Re-entry of Liquid (condensate) Into The Pump

Gas Transfer Applications

If it is desired to save (recompress) or recirculate the pumped gas, note that the lip seals at the narrow end of the pistons are not hermetically tight. The cylinders have an inward leakage from the ambient air of approximately 0.05 to 0.1 std cm 3/sec. each. Thus, the total ambient air flow will be the sum of this inward leakage plus the pumped gas.

Partial Pressure Effects

The pumping speed performance as shown in the previous Pumping Speeds figure implies that the net speed is zero below the pressure of 10 or 20 millitorr. This is only true for air (or the gas existing at the discharge port at atmospheric pressure as well as inside the crankcase).

For gases which are either absent in the ambient air or represent a small fraction of the atmosphere, the pumping speed is retained to very low inlet pressures approaching ultra-high vacuum range. For example, when used with helium leak detectors, the oil-free pump will remove the residual helium to partial pressures as low as 10^{-8} Torr range.

4. Maintenance and Troubleshooting

RETURNED SHIPMENT PROCEDURE

Returned equipment will not be accepted by VRC without prior authorization. Before returning a pump, please call for a returned goods authorization number (RGA).

MAINTENANCE

Maintenance on the 2 By 8 pumps is unnecessary unless inadequate pressure or excessive noises develop. Typically after 10,000 hours of proper operation the pump should be reconditioned (replacement of pistons, seals, and cylinders may be required). The pump contains no oil and none should be used on any of its components. Certain severe operating conditions exceeding the limits specified in previous sections may, however, necessitate more frequent cleaning.

Because of the design of the pump, its parts, and its proven longevity of performance, repairs are expected to be minimal. However, any repairs should be performed by VRC service personnel who have been specially trained and who have exact replacement parts on hand, thus minimizing customer down time.

TROUBLESHOOTING

The following troubleshooting procedures will help to localize the source of a pump malfunction. The major functional categories identified by these procedures include: pump contamination, O-ring seals, motor coupling & drive mechanism, and valve assemblies. Upon unusual noise, change in base pressure, or failure of the pump to operate, the user should carefully document the following information:

1. Model number, serial number, sales order number, and date the pump was received.
2. Pumping application. Include types of gases pumped, volume of chamber, pressures, cycle times, whether the pump is used alone as a roughing pump or in combination with a high vacuum pump (define type of high vac pump), and number of hours pump has been run.
3. System preparation. If the pump was used in place of an oil-sealed mechanical pump, describe the method of cleaning the vacuum system (especially the roughing manifold) prior to installation of the oil-free pump.
4. Symptoms of malfunction. Describe the problem (base pressure or pumping speed changes or any noise changes).

PROBABLE CAUSES AND REMEDIES

Install a vacuum gauge (for example, a thermocouple vacuum gauge) near the inlet of the pump and a vacuum valve upstream of the gauge. In this way, the performance of the pump can be quickly checked when isolated from the system.

Check for high ultimate pressure (approximately 100 to 200 mTorr) and for a slow pressure rise. The pump may be contaminated by oil or other liquid. A constant high ultimate pressure (above 1 Torr) may indicate problems with seals or valve assemblies.

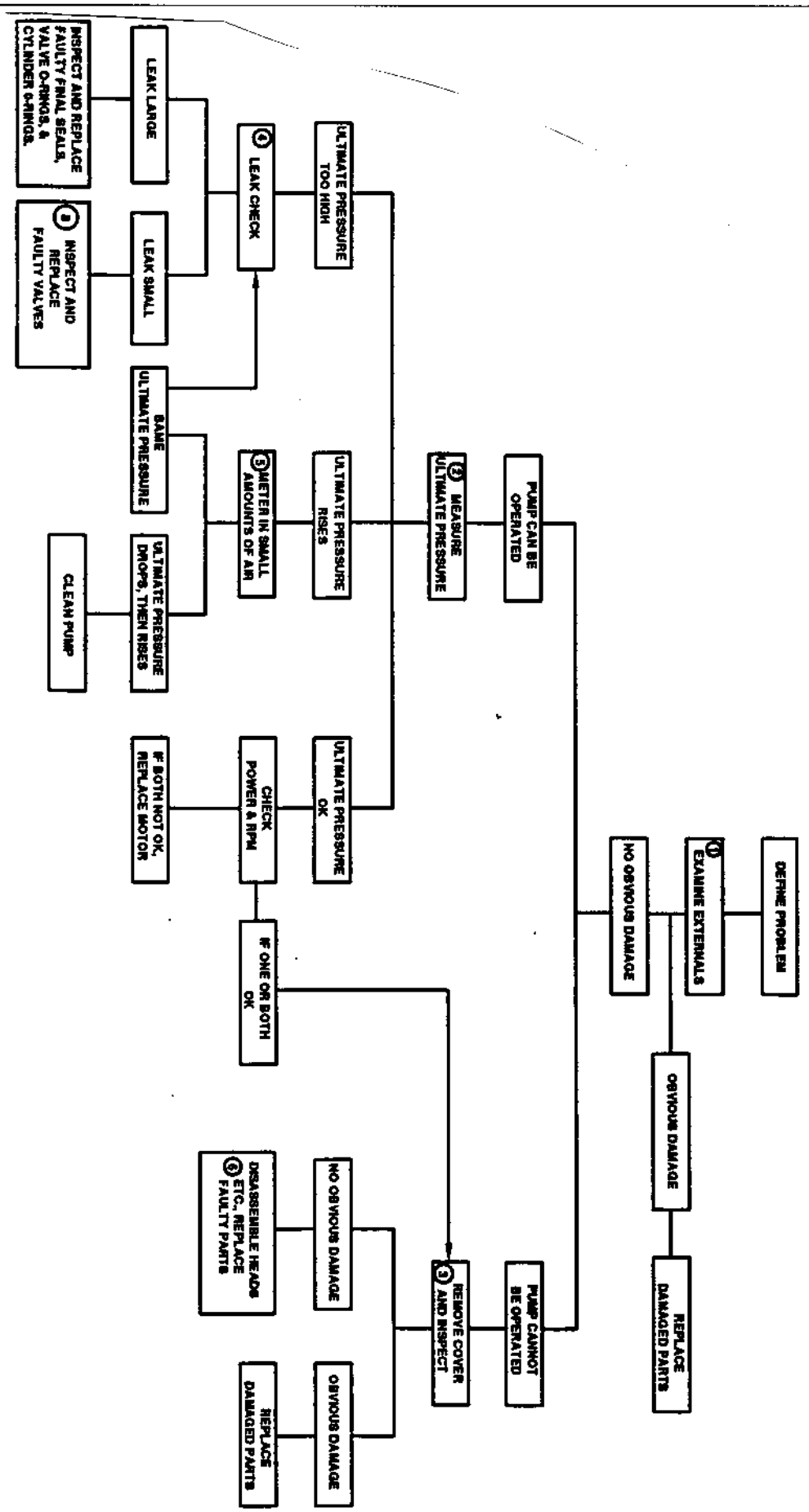

Troubleshooting Block Diagram

SERVICE PROCEDURES

⚠ WARNING

Disconnect and lock-out power to the pump before removing cover. Serious injury can result if hands, feet, or clothing are caught in the moving parts.

1. Examine the pump and motor for any visible signs of damage. Repair damage. If there is no visible evidence of a problem and the pump can be operated (based on user report) proceed to step 2. If the pump cannot be operated, proceed to step 3.
2. Use a Pirani gauge mounted on a blind inlet blank-off flange at the pump inlet to monitor pressure. Apply power to the pump; be prepared to stop the pump quickly. Operate the pump to determine if the ultimate pressure is near its specified limit after 10 minutes of operation. If the ultimate pressure is too high and remains constant, proceed to step 4. If the ultimate pressure rises slowly, proceed to step 5. If available, use a power meter to determine power requirements of the pump at ultimate pressure. If the motor exhibits a higher than characteristic power curve, proceed to step 3. If the power curve is correct, verify with a strobe light that the motor rotates at 1125 RPM (60 Hz operation), or 937 RPM (50 Hz operation). Turn off the pump and unplug it from its power source.
3. Vent the pump , lock out power, and remove the cover. Turn the crankshaft by hand. If it turns freely and with no obvious interference, the motor may be the source of trouble. Also examine the drive shaft, bearings, connecting rods, and drive belt for visible signs of damage. Repair any obvious damage. If there is no visible evidence of a problem, proceed to step 6.
4. Vent the pump and remove the cover. Install a leak rate fixture (gas flowmeter) on the exhaust box and operate the pump carefully with blank-off inlet flange in place or a closed inlet valve at the pump. If the gas in-leakage rate is high (greater than 60 cc/min), the cause is probably a final seal leak, valve O-ring, or cylinder O-ring leak. Proceed to step 7. If the leak rate is small and the ultimate pressure is correct, the cause is probably valve failure. Go to step 8.
5. Bleed a small amount of air into the inlet of the pump. A lower ultimate pressure followed by a subsequent pressure rise indicates contamination. Disassemble the pump and clean all internal parts. If the ultimate pressure doesn't change, go to step 4.
6. Remove the cylinder heads and examine for visible signs of damage. Remove and examine valve plates. Remove and examine pistons and connecting rods. Replace damaged parts.
7. Remove the cylinder heads, crank shaft, valve plates, pistons, and cylinders and inspect lip seals. Replace as necessary.
8. Remove cylinder heads. Examine valve plates for visible signs of damage. Replace as necessary. The sound of air will be heard rushing past leaky valves or exhaust box if any valves have failed. Remove cylinder. Examine valves for damage, replace as necessary. Remove the valves in the exhaust box and replace as necessary.
9. Reassemble and test the pump as described in step 2.

5. Spare Parts List

P/N	Description
653306090	Motor, 1 H.P., 3 Phase, 208-230/460V, 60 Hz, TEFC
653306100	Motor, 1½ H.P., 1 Phase, 115/208-230V, 60 Hz, TEFC
L7624001	Cylinder 1
L7019001	Cylinder 2
L7036302	Piston & Connecting Rod Assembly Contains: Piston, Connecting Rod, Piston Top, Dynamic Seal and Retainer, Wrist Pin, 2 Viton O-Rings, 2 Bearings, Screws & Washers (NOTE: 1 or 2 Required for each Pump)
L7605001	Shaft & Bearing Assembly Kit Contains: Shaft, 2 Large and 2 Small Bearings, 2 Eccentric Collars, 2 Lock Nuts, Spacer, Key
46996001	Wrist Pin Bearing & Wrist Pin Set for 2 Pistons Contains: 4 Bearings, and 2 Wrist Pins
L7058302	Valve Plate Assembly Kit Contains: Cylinder Valve Plate, Guide Block (exhaust), Guide Block (intake), Vulcanized Viton Exhaust Valve, Vulcanized Viton Intake Valve, Shoulder Washer, Spring (exhaust), Spring (intake), 3 Bearings, Screws, Washers, and Viton O-ring (NOTE: 1 or 2 required per pump)
46996002	Viton O-Ring Kit Contains: Pump O-Rings (Viton), and 2 Dynamic Seals
46995015	Cylinder Exhaust Kit Contains: Guide Block, 2 Vulcanized Viton Exhaust Valves, 2 Springs, 2 Bearings, Screws and Washers (NOTE: 1 or 2 required for each pump)
46996003	High Pressure Exhaust Kit Contains: Guide Block, Vulcanized Viton Exhaust Valve, Spring, Bearing, Screw and Washer (NOTE: 1 or 2 required for each pump)
795039	Instruction Manual, 1 By 8, 1 By 16, and 2 By 8 Dry Pumps

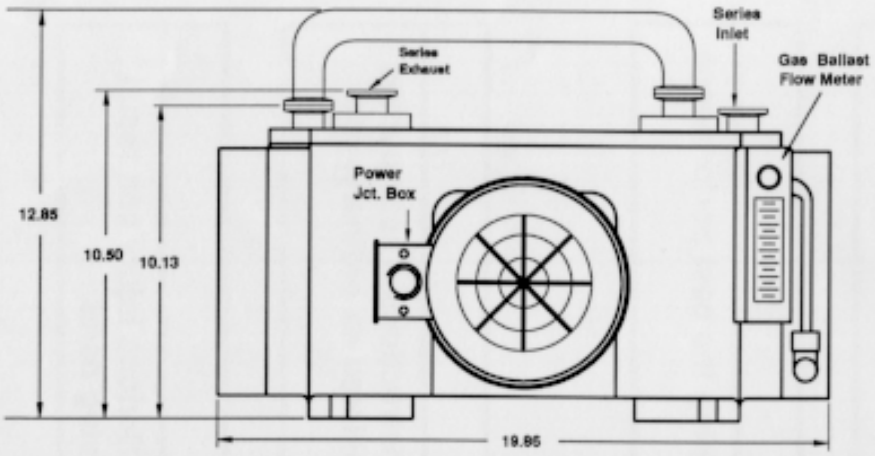

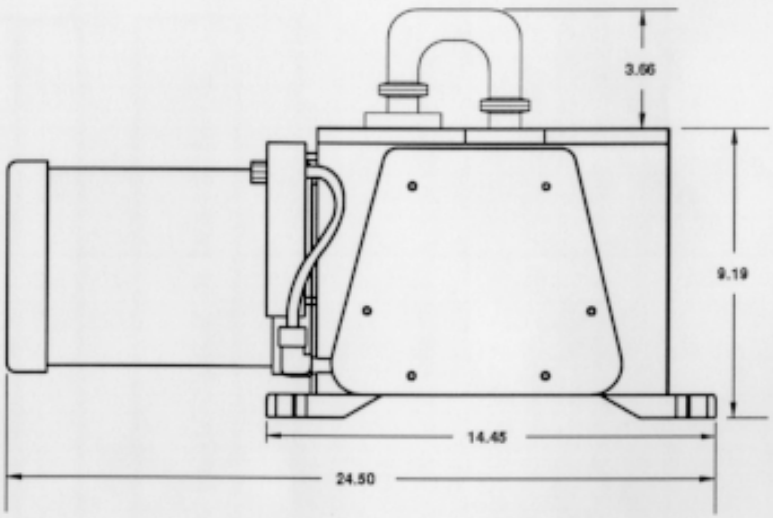

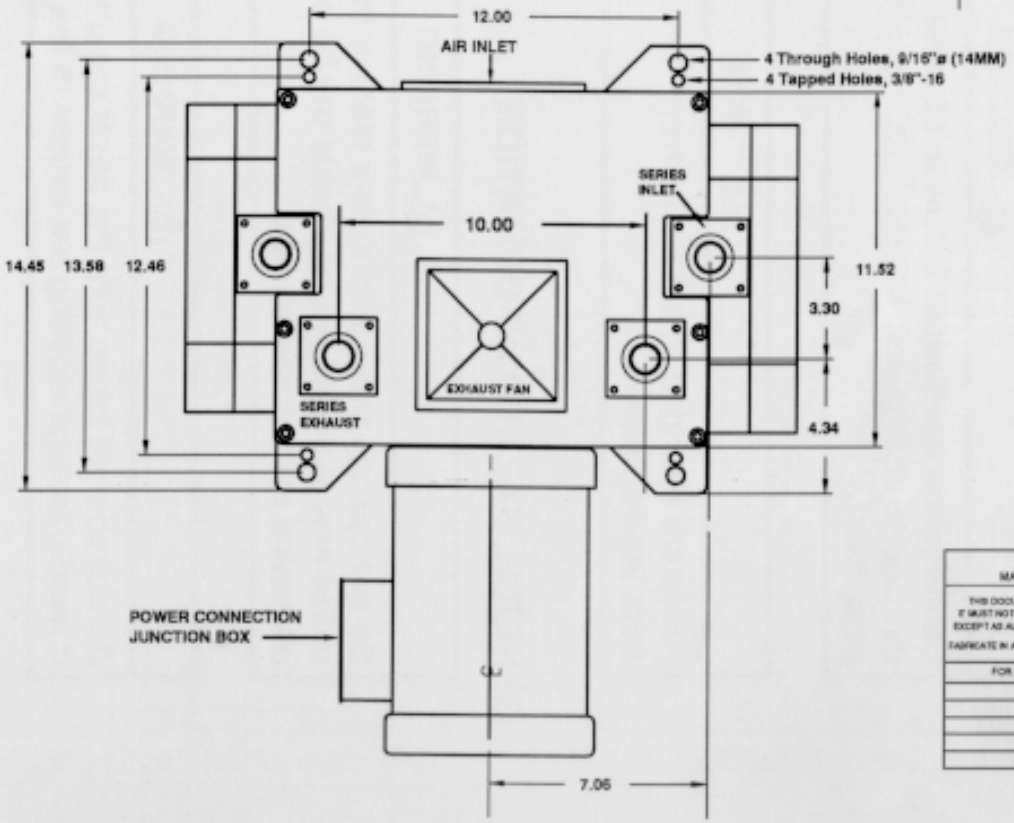

This View Shows Pump with Optional Manifold For Series Operation.

CAD GENERATED DOCUMENT MANUAL CHANGES NOT PERMITTED					VACUUM RESEARCH CORPORATION				
THIS DOCUMENT CONTAINS PROPRIETARY INFORMATION IT MUST NOT BE REPRODUCED OR DISCLOSED TO OTHERS EXCEPT AS AUTHORIZED IN WRITING BY V.R.C.					DRAWN TKS	DATE 7-15-94	CHECKED	DATE	APPROVED	DATE
FABRICATE IN ACCORDANCE WITH V.R.C FABRICATION PROCEDURES					ABSOLUTE 2 BY 8 SERIES GENERAL ARRANGEMENT				
FOR OTHER REVISIONS SEE ECO HISTORY FILE									
				ECO	NOT OTHERWISE SPECIFIED				
				DFT	FRAC+/- 1/32	ANG+/- 1°	D	ABS2X8GA	
				CHK	DEC.XX+/- .01	.XXX+/- .005	SIZE	DRAWING NO.	REV.
				DATE	COMC .005TIR			PROD.	SHEET OF
				REV	FIN. .63RMS				

VRC
Vacuum Research Corporation •2419 Smallman Street• Pittsburgh, PA 15222 USA
Telephone (412)261-7630 •Toll Free (800)426-9340•FAX: 412-261-7220