Foreline Traps with Sorbent Basket or Baffle for Particles

Left to right: Angle style with optional Pirani/TC tube, Inline style trap with NW-25, Angle style with 1 inch hose connections

- **Select Copper Wool, Activated Alumina or Carbon**
- **Available in Both Right Angle and Inline Styles**
- **Orient in Any Direction, Spring Loaded Sorbent Bed**
- **Positive Creep Proof Design with O-Ring Seal**
- **Fits Pumps up to 20 CFM, 34 m^3/Hr, 550 l/min.**
- **Leak Tested to Better than 2 X 10^{-9} scc/sec**
- **Any Mix of Ports for Rubber Hose or NW Flanges**
- **No Tools Needed For Easy Sorbent Replacement**
- **Aluminum Body and Sorbent Basket; 316 SS Spring**

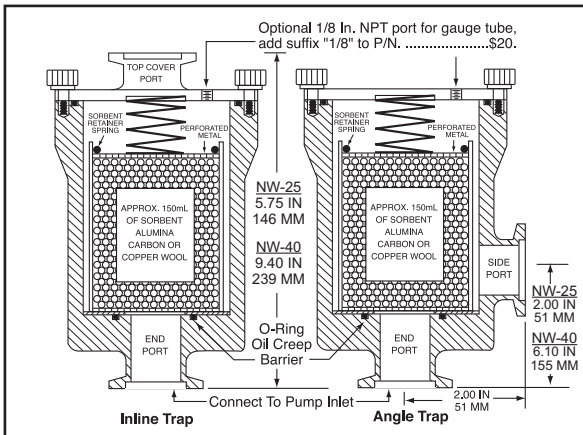

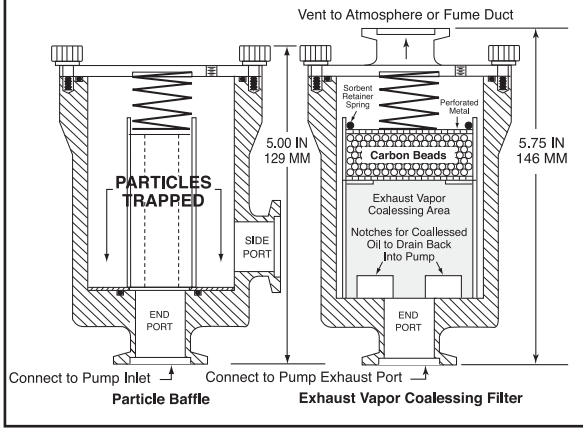

Inline Trap Part Number	Price	Exhaust Vapor Coalessing Filter Any Angle or Inline P/N ..... $396.		Port Size & Flange Style
INLINE TRAP 16	$376.	ANG EX COALES 16	INL EX COALES 16	NW-16 Flange
INLINE TRAP 25	$376.	ANG EX COALES 25	INL EX COALES 25	NW-25 Flange
INLINE TRAP 3/4	$376.	ANG EX COALES 3/4	INL EX COALES 3/4	3/4" Outside Diam.
INLINE TRAP 1.0	$376.	ANG EX COALES 1.0	INL EX COALES 1.0	1" Outside Diam.
INLINE TRAP 40	$535.	NOT AVAILABLE	NOT AVAILABLE	NW-40 Flange

Angle Trap Part Number	Price	Particle Baffle Part Number	Price	Port Size & Flange Style
ANGLE TRAP 16	$376.	ANG TRAP PART 16	$356.	NW-16 Flange
ANGLE TRAP 25	$376.	ANG TRAP PART 25	$356.	NW-25 Flange
ANGLE TRAP 3/4	$376.	ANG TRAP PART 3/4	$356.	3/4" Outside Diam.
ANGLE TRAP 1.0	$376.	ANG TRAP PART 1.0	$356.	1" Outside Diam.
ANGLE TRAP 40	$535.	ANG TRAP PART 40	$535.	NW-40 Flange

Also available with mixed flanges, such as: NW-16 on one port and NW-25 on the other.
Specify Alumina, Carbon or Copper Wool Sorbent.

Replacement Sorbent and Spare Parts

Description	Part #	Price
Active Alumina Sorbent, approximately 300 ml (two charges)	V801163	$25.
Activated Carbon Sorbent, approximately 300 ml (two charges)	V801164	$24.
Copper Wool Sorbent, approximately 300 ml (two charges)	V801165	$35.

One container of two sorbent charges is included with each trap.

Description	Part #	Price
Sorbent Basket Assembly (without sorbent)	V801160	$87.
Particle Trap Standpipe	V74050	$66.
Top Cover O-Ring	V206142	$3.
Sorbent Basket O-Ring	V206142	$4.
Spring	V308654	$10.
Thumb Screws, set of 4	V801162	$3.

Exhaust Mist Eliminators

For 100-3.5 & 200-7 Pumps
Model **Ex. Fil. NW-25 7 cfm**, P/N RV810220.....$177.

For 400-14 Pumps
Model **Ex. Fil. NW-25 14 cfm**, P/N RV810230....$265.

For 600-21, 800-28, 1000-35, 1500-53 & 1800-64 Pumps
Model **Ex. Fil. NW-40 64 cfm**, P/N RV810240....$373.

For Applications with High Flow
Model **Ex. Fil. NW-25**, P/N RV810250 .....$340.

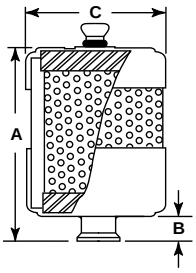

Dimensions

P/N	A Height	B	C Diameter	Flanges	Flow
RV 810220	5.5	0.88	2.5	NW-25	3.5 or 7 cfm pumps
RV 810230	5.25	0.88	5.13	NW-25	10 to 14 cfm pumps
RV 810240	7.13	2.13	10.25	NW-40	20 to 64 cfm pumps
RV 810250	9.25	0.88	5.13	NW-25	High Flow Applications

Replacement Elements

Model RPL. Elem. 7 cfm P/N RV810221 (4.0 in. high X 2.2 in. O.D.).....$37.
Model RPL. Elem. 14 cfm P/N RV810231 (3.8 in. high X 4.0 in. O.D.).....$56.
Model RPL. Elem. 64 cfm P/N RV810241 (4.75 in. high X 9.2 in. O.D.).....$71.
Model RPL. Elem. Hi Flo P/N RV810251 (6.15 in. high X 4.0 in. O.D.).....$67.

Vacuum Research Corp. • 2419 Smallman Street • Pittsburgh, PA 15222 USA • www.vacuumresearch.com
Phone: 800-426-9340 • 412-261-7630 • FAX: 412-261-7220 • e-mail: VRC@vacuumresearch.com

NW-40 Angle Style Foreline Filter

- Use with Rotary Vane, Piston, Scroll Vacuum Pumps
- Safeguard Pump From Dust Particles and Contamination
- Protect Vacuum System from Backstreaming
- Ideal for Trapping of Condensible Vapors
- Positive Engagement O-Ring Seal System
- Large Dirt Holding Capacity and Easy Cleaning Design
- Rugged Zinc Coated All Steel Construction
- Vacuum Typically 1 X 10^{-5} mm Hg (1X10^{-5} mbar-L/sec)
- Housing is ATEX Compliant with SS Clips for Durability
- Applications in Vacuum Coating, Leak Detection and More

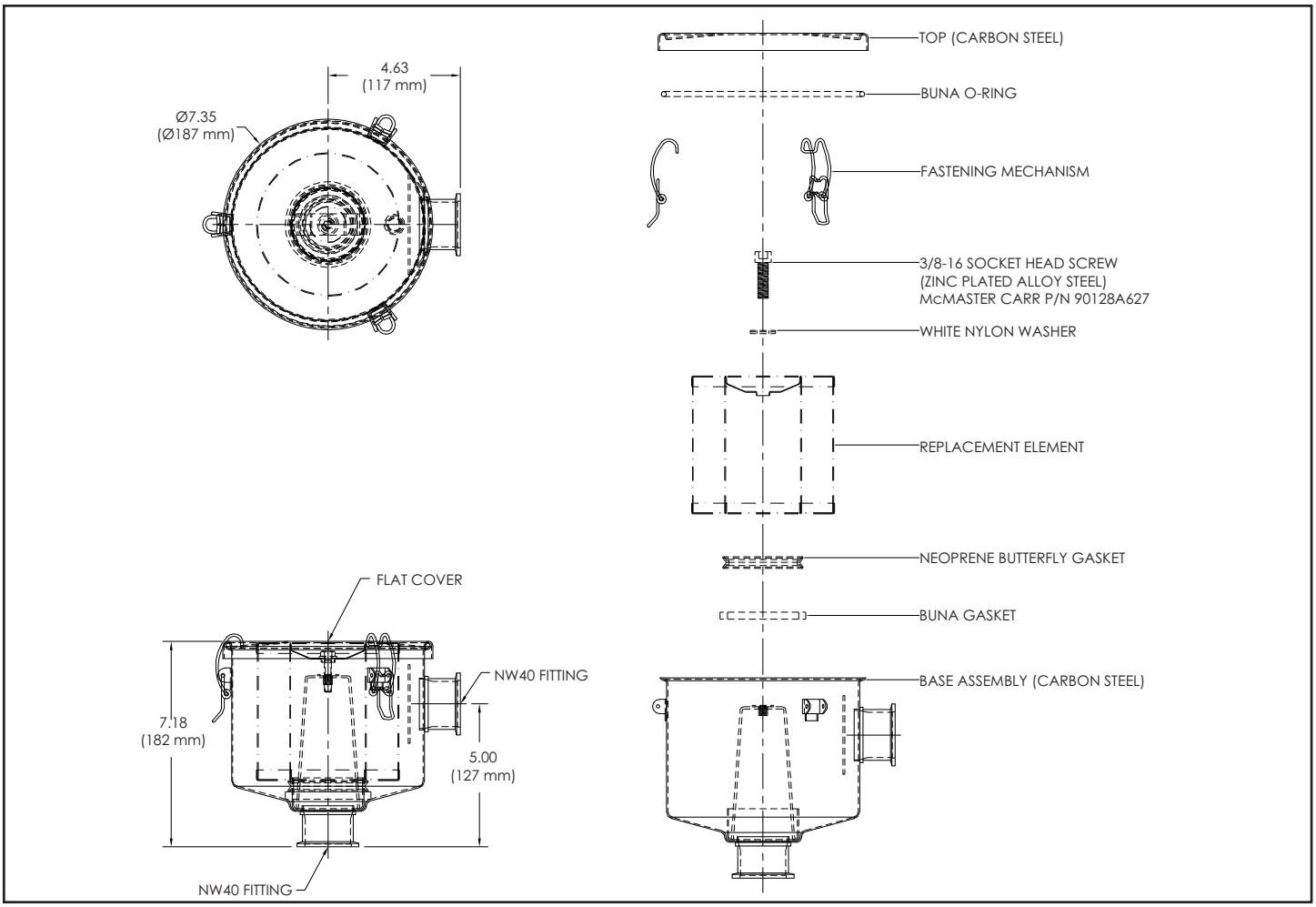

Ordering Information

NW-40 Angle Style Foreline Filter

Part Number	Price
RV810265	. . . . . .$570.

Filter Media Options

Activated Alumina	Prevents backstreaming and traps water and acid vapors
Paper	Pleated media for high dirt holding capacity 99%+ removal efficiency standard to 2 micron
Polyester	Pleated media for high dirt holding capacity 99%+ removal efficiency standard to 5 micron

Replacement Elements

RV810266	ACTIVATED ALUMINA . . .$90.
RV810267	PAPER . . . . . .$21.
RV810268	POLYESTER . . . . . .$30.

printed Feb 2012

Vacuum Research Corp. • 2419 Smallman Street • Pittsburgh, PA 15222 USA • www.vacuumresearch.com
Phone: 800-426-9340 • 412-261-7630 • FAX: 412-261-7220 • e-mail: VRC@vacuumresearch.com